CardioMessenger Smart

Patientengerät für das BIOTRONIK Home Monitoring System
de • Gebrauchsanweisung

Transmetteur pour Téléc@ardiologie - le BIOTRONIK Home Monitoring System
fr • Manuel technique

Transmitter for the BIOTRONIK Home Monitoring System
en • Technical Manual

Trasmettitore per il sistema Home Monitoring di BIOTRONIK
it • Manuale tecnico

Patiëntapparaat voor het BIOTRONIK Home Monitoring-systeem
nl • Technische handleiding

BIOTRONIK
excellence for life

Table of Contents

1 Introduction

Dear Patient:

You have received a device with the additional Home Monitoring function by BIOTRONIK.

How Home Monitoring works

Your implanted device (1) is equipped with a special transmitter which sends cardiac information to your CardioMessenger (2). This usually happens at night.

The transmission power of your implanted device is low and does not pose a health risk. However, the transmission range from your implanted device is limited, and therefore, the use of a CardioMessenger is required.

The CardioMessenger collects the information and transmits it to the BIOTRONIK Service Center (4) as encoded messages via a mobile connection (3).

The messages are decoded and can be viewed by your physician (5) on a protected web site.

Usage of this additional data is specific to the patient and the implanted device. Your physician will explain to you how he or she will use the Home Monitoring function.

⚠ Attention

Home Monitoring is not an emergency system. If you are not feeling well, contact a physician.

2 First Steps

Check the Package Contents

Your CardioMessenger is supplied ready for use, and you can operate it immediately by inserting the power plug into the wall outlet.

Prior to usage, check the CardioMessenger and its accessories for any visible damage and use only undamaged components.

Return a damaged CardioMessenger to your physician.

Use only the provided original power supply brick (see the technical data).

Use of other equipment may impair proper functioning of the CardioMessenger and increase the emitted electromagnetic interference or decrease the CardioMessenger's resistance to electromagnetic interference.

The product package includes the CardioMessenger (1) with power supply brick (2), the quick reference guide (3), and the technical manual (4).

(1)

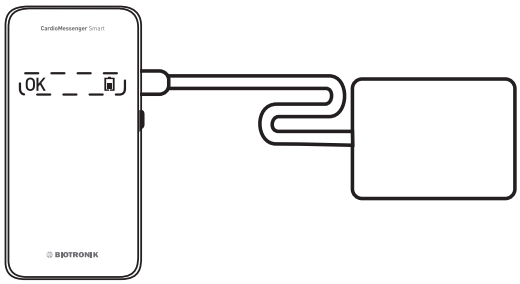

(2)

(3)

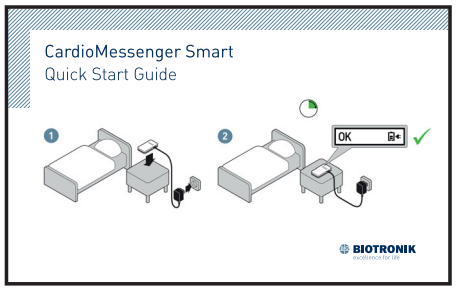

(4)

⚠ WARNING

The CardioMessenger package may contain ingestible small parts, therefore, keep the package away from children under three years of age.

Where Do I Put the CardioMessenger?

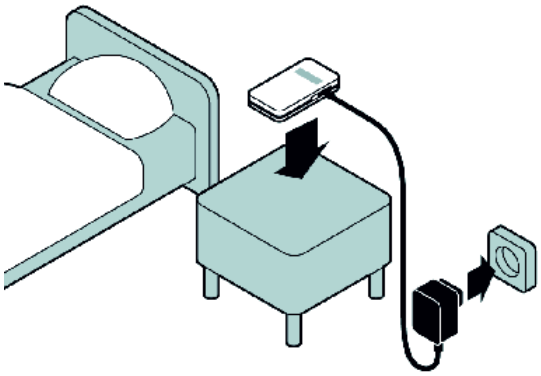

At night, the CardioMessenger should be placed close to your bed to ensure the nightly data transfer from the implanted device.

The bedside table is therefore the best location for your CardioMessenger, as it usually meets the following conditions:

- The CardioMessenger is placed on a solid base and cannot fall.
- The distance to the implanted device is less than 2 m (6 ft).
- Positioned on the bedside table, you can clearly see the symbols on the CardioMessenger's display.

⚠ Attention

Make sure that the distance to the implanted device is less than 2 m (6 ft), so that regular data transmission from the device to the CardioMessenger is ensured.
Verify on a daily basis that it is ready for service.

However, if the **bedside table is made of metal**, you should not place the CardioMessenger directly on the table. For example, place the CardioMessenger on a stack of books to establish a distance of approximately 5 cm (2 inches) between the two so that the metal does not interfere with the device's data reception.

If you want to use the CardioMessenger in mobile operation, we recommend that you make a habit of charging it every night on the bedside table.

How Do I Connect the CardioMessenger?

Your CardioMessenger is already configured and is ready for use. You can operate it immediately by inserting the power plug into the wall outlet. For more information, consult the included quick reference guide.

⚠ **WARNING**

- Lay the power cord so that it is not a trip hazard or a risk of strangulation.

The outlet must be easily accessible and should not be connected to a light switch in order to prevent the CardioMessenger from accidentally being turned off.

Proceed as follows if the plug has been disconnected during removal from the package or during shipping:

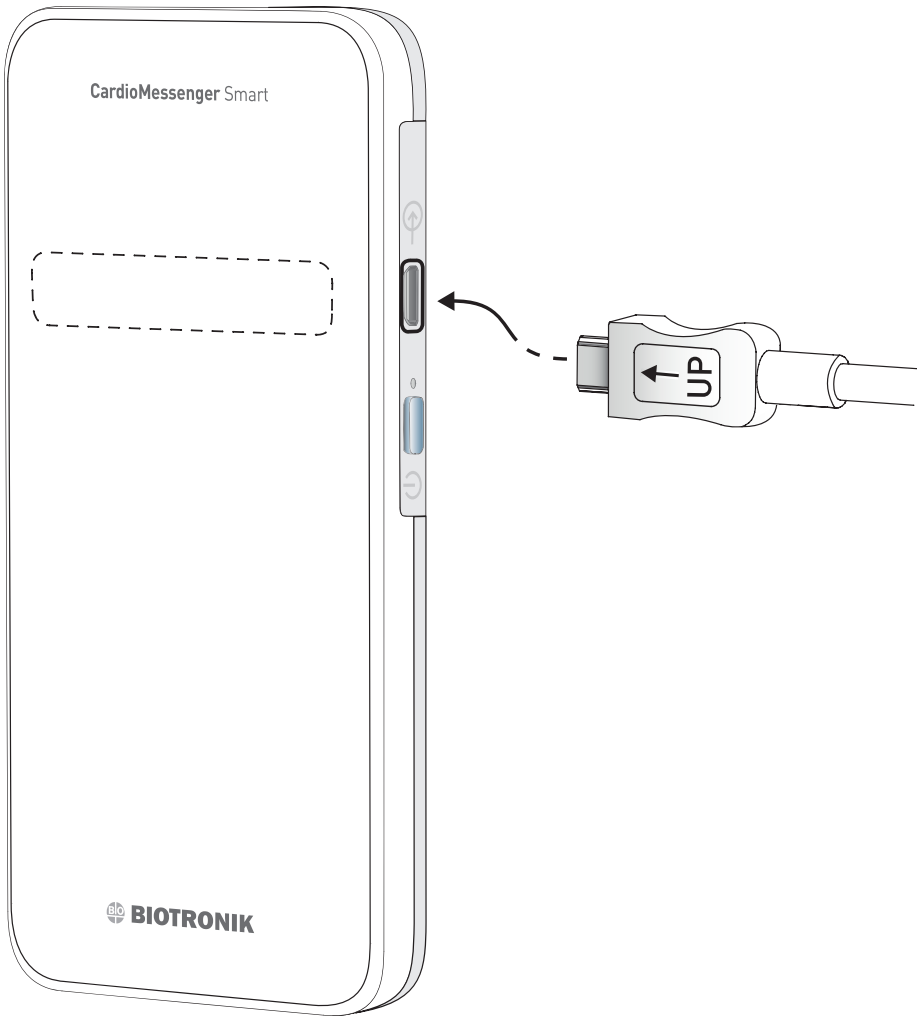

1. Connect the small plug (micro USB plug) on the right to the CardioMessenger.
   The connector port is labeled with the following symbol:
   
2. Make sure that the marking on the plug is facing upward.
3. Insert the power plug into the wall outlet.

The CardioMessenger now turns on automatically and performs a self-test.

The CardioMessenger is ready for use once the self-test is completed and the following icons are displayed:

If this is not the case, please refer to: Error Resolution [Page 100].

How Do I Use the CardioMessenger?

The CardioMessenger automatically receives the information from your implanted device and transmits it to the BIOTRONIK Service Center.

Attention

Check once a day whether your CardioMessenger is powered on and ready for use.

This is indicated by the following icons:

How Do I Turn Off the CardioMessenger?

Since the CardioMessenger contains a mobile ("cellular") module, you may need to power off the CardioMessenger for safety reasons in areas where the use of cellular phones is prohibited (e.g., on an airplane).

Such areas can be identified by signs similar to the following:

Press and hold the blue key on the right side of the CardioMessenger for two seconds until the display turns off.

The blue key is labeled with the following symbol:

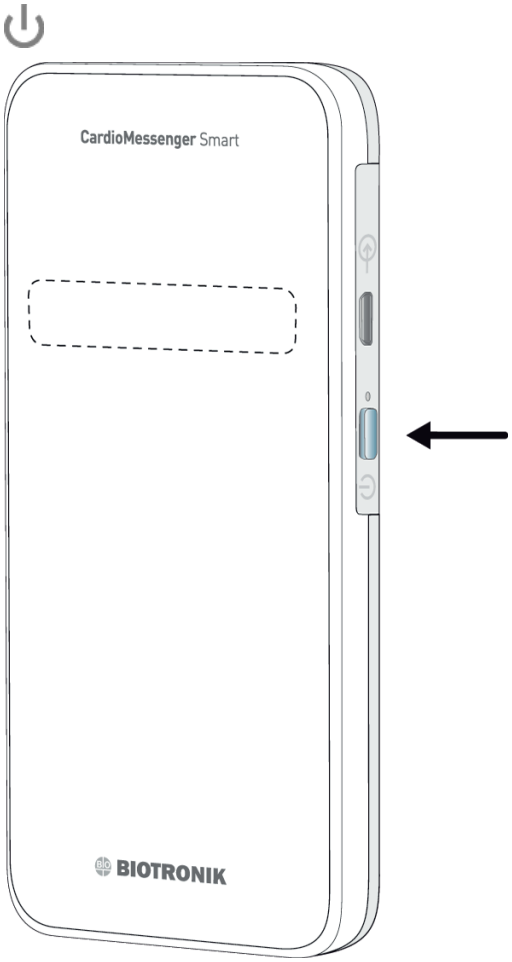

⚠ WARNING

If the CardioMessenger is powered off for an extended period of time, data may be lost.

- After leaving the area where cellular phones are prohibited, power on the CardioMessenger again.

In some locations, the use of cellular phones is prohibited to provide quiet zones (e.g., in a theater or cinema). As the CardioMessenger is silent, it does not need to be powered off in such locations.

The functions of your implanted device are not affected by the CardioMessenger at any time.

Your implanted device remains fully functional even if the CardioMessenger is not ready for use.

3 The CardioMessenger Icons

The CardioMessenger has the following icons:	
OK	Operation icon
	Callback icon See Callback Function [Page 98].
	Information icon See Error Resolution [Page 100].
	The battery icon is always displayed with 1-3 bars according to the charging status.
	When the CardioMessenger is connected to the power supply brick and is charging, a battery icon with a small power plug is displayed.

4 Functions

Self-Test

The CardioMessenger automatically conducts a self-test after being connected.

All icons on the CardioMessenger are displayed.

The CardioMessenger then checks the connection to the cellular phone network.

The operation icon flashes and the battery icon is displayed.

The connection test can take up to 15 minutes.

Once the connection is established, the operation and battery icons remain permanently activated.

The CardioMessenger is now ready for use.

If the connection **was not** established, the information icon flashes.

Additional information can be found under: Error Resolution [Page 100].

Callback Function

The callback function is an additional function that your physician can use in different ways. You will be informed by your physician if and how he or she plans to use this function.

For example, your physician can use the callback icon to ask you to contact them. Your physician can turn on the icon via the cellular phone network. It will then flash for a maximum of three days.

Contact your physician during office hours as soon as you notice that the callback icon is flashing.

Attention

Check once a day whether your CardioMessenger is powered on and ready for use.

Turning off the callback icon

To turn off the callback icon, briefly power off the CardioMessenger.

1. Press the blue key on the right side of the CardioMessenger for about two seconds.
2. All symbols disappear.
3. Wait approximately thirty seconds.
4. Press the blue key again for approximately two seconds.
5. The CardioMessenger performs a self-test.
6. The operation and battery icon are then displayed, and the callback icon stops flashing.

However, please do not forget to call your physician.

If the CardioMessenger is connected to the power supply brick, it will start automatically; you neither have to wait nor power it on.

5 Error Resolution

If your physician contacts you because device messages are not being received but your CardioMessenger was ready for use during the period in question, you should remove possible sources of electromagnetic interference from the immediate vicinity of the CardioMessenger.

Possible sources of electromagnetic interference can be communication devices such as wireless home network equipment, cellular phones, cordless phones and their base stations.

According to the standard IEC 60601-1-2: 2014 a distance of 0.3 m (12 inches) from the CardioMessenger is recommended (for further details see: Appendix [Page 114]).

Malfunctions on the CardioMessenger are indicated by the icons.

Symbol	Behavior	Operational status
	Off	Error type A: no power supply

Symbol	Behavior	Operational status
OK	Flashing	Error type B: self-test failed
	Flashing	Error type C: no mobile connec-tion

Error Type A - No Power Supply

The operation icon is not displayed, indicating that the CardioMessenger is not ready for use.

Make sure that

- the micro USB plug is properly inserted into the CardioMessenger,
- the power plug is properly inserted into the wall outlet,
- the outlet provides an electrical current, for example by temporarily connecting the bedside lamp to the outlet and turning the lamp on.

If you do not find any errors, contact your physician.

Error Type B - Self-Test Failed

All symbols are flashing, indicating that the CardioMessenger is not ready for use.

Repeat the self-test as the CardioMessenger was not able to complete it.

1. If the CardioMessenger is connected to the power supply brick, disconnect it.
2. Press the blue key on the right side of the CardioMessenger for about two seconds.
3. Leave the CardioMessenger powered off for about thirty seconds.
4. Power on the CardioMessenger by connecting it to the power supply brick.

The CardioMessenger starts and automatically repeats the self-test. When the self-test is completed, the CardioMessenger is ready for use.

The connection test can take up to 15 minutes.

If all symbols continue to flash, the CardioMessenger is defective. Return it to your physician.

Error Type C - No Mobile Connection

The information icon flashes and the battery icon is displayed.

Check the mobile connection since the CardioMessenger cannot connect to the BIOTRONIK Service Center.

1. Press the blue key on the right side of the CardioMessenger for about two seconds.
2. Find a place with better cellular reception for your CardioMessenger. Make sure that the distance to the implanted device is still less than 2 m (6 ft).
3. Press the blue key again for approximately two seconds.

The CardioMessenger restarts and performs the self-test. It checks the connection to the cellular phone network.

The connection test can take up to 15 minutes.

Once the test is completed successfully, the operation and battery icon are displayed. The CardioMessenger is now ready for use.

If the CardioMessenger is generally unable to connect to the cellular phone network from near your bed, contact your physician.

Inadequate cellular phone network connection can occur in rooms with thick walls or when traveling.

6 Handling

The CardioMessenger is intended primarily for continuous operation at home because it receives information from your implanted device once daily, usually at night, and forwards it to the BIOTRONIK Service Center.

If handled properly, the installed battery should supply the CardioMessenger with 16 hours of power even after 500 complete charging cycles (which is at least two years).

The CardioMessenger contains a mobile ("cellular") module. In order to prevent any interference with your implanted device, the prescribed minimum distance between the device and a cellular phone must also be maintained with the CardioMessenger.

⚠ Attention

The distance between the CardioMessenger and the implanted device must be at least 15 cm (6 inches) so that the CardioMessenger does not interfere with the device.

To disconnect the CardioMessenger from the alternating current supply, pull the power supply brick plug out of the socket.

Charging

If you want to use the CardioMessenger in mobile operation, we recommend that you make a habit of charging it every night on the bedside table.

You should charge the CardioMessenger once before the first mobile commissioning. To do this, connect the CardioMessenger to the mains supply. The charging process usually takes three hours.

⚠ WARNING

Do not charge the CardioMessenger with the power supply brick in the outdoors.

⚠ WARNING

The CardioMessenger must be charged at the latest when the battery icon flashes.

During charging, the individual segments of the battery icon flash alternatingly and a small power plug is displayed.

The three bars on the battery icon flash successively until the CardioMessenger is fully charged. Once it is fully charged, all three bars are completely filled.

Note

If the battery is defective, the CardioMessenger can still be used with the power supply brick.

Even if the battery is completely discharged, the CardioMessenger can still operate using the power supply brick.

Cleaning

Keep the CardioMessenger clean and away from dirty or dusty environments.

Use a soft, lint-free cloth for cleaning.

Use a cloth slightly moistened with water for cleaning. However, avoid bringing the CardioMessenger into direct contact with water or solvents.

Protect the CardioMessenger from direct contact with water.

Unplug the CardioMessenger from the power supply brick before cleaning it with a damp cloth.

Maintenance

The CardioMessenger is intended for continuous, automatic operation. When correctly in-use, ongoing maintenance typically is not required.

Disposal

Do not dispose of the CardioMessenger with your household trash.

CardioMessenger and the associated power supply brick contain materials that must be correctly disposed of in accordance with environmental protection regulations.

If you no longer use the CardioMessenger, you may dispose of it and its associated power supply brick as electronic waste in accordance with the applicable regulations.

The CardioMessenger and all the parts from the package can be returned to your physician. Your physician will return all parts to BIOTRONIK.

BIOTRONIK ensures disposal in accordance with the national versions of the European guideline 2012/19/EU on waste electrical and electronic equipment (WEEE 2).

7 Precautionary Measures

The CardioMessenger is a medical product and therefore complies with the strict requirements for the development, manufacturing, and testing of medical devices.

Statutory regulations for electrical devices in hospitals require that the CardioMessenger and its accessories not be used in areas defined as patient environment (e.g., in the operating room).

Please observe the following safety-relevant notes:

- Do not place the CardioMessenger next to a television set, microwave oven, or a similar source of electromagnetic interference.

  You may hear noises typical of cellular phones if you place the CardioMessenger too close to a radio alarm or a television set, for example.
- Protect the CardioMessenger from direct contact with water. For example, wear it under your coat or keep it in a bag when it rains.

- Do not carry the CardioMessenger inside the breast pocket of your shirt or jacket as the distance from here to the implanted device could be less than 15 cm (6 inches).
- Do not bring the CardioMessenger into the vicinity of fire.
- Do not turn on the CardioMessenger if it has recently been in a cold environment. Let it warm up to room temperature for 30 minutes, since the resulting condensed water may harm the electronic circuitry.
- Do not turn on the CardioMessenger if it has recently been in a hot environment. Let it cool down to room temperature for 30 minutes.
- Do not operate the CardioMessenger in areas where cellular phones are prohibited for safety reasons (for example, in certain areas of the hospital or on airplanes).
- Make sure that the distance to the implanted device is less than 2 m (6 ft), so that regular data transmission from the device to the CardioMessenger is ensured.

Protect the CardioMessenger and the power supply brick from:

- Water and high humidity
- Temperatures above 40°C (104°F) (e.g., direct sunlight, strong halogen spotlights, fire)
- Temperatures below negative 5°C (23°F; CardioMessenger) and below 0°C (32°F; power supply brick)

- Solvents, acids, detergents, and lyes
- Pressure below 700 hPa (corresponding to altitudes above 3000 m, approx. 10,000 ft)
- Pressure above 1060 hPa (corresponding to altitudes below sea level)
- Violent shocks or other strong mechanical influences
- Intense light sources (direct sunlight, strong halogen spotlights)

8 Guidelines

Telemetry Data for Europe

Your implanted device transmits diagnostic data to the CardioMessenger via a radio frequency (RF) assigned by the European Conference of Postal and Telecommunications Administration for the operation of Ultra Low Power Active Medical Implants (CEPT/ERC REC 70-03).

BIOTRONIK is legally obligated to inform you that the radio service does not have exclusive use of the assigned frequencies and that the transmission of device data is not permitted to interfere with other radio services. The frequency and technical parameters of the built-in transmitter have been carefully selected to ensure that electromagnetic interference between other services and the data transmission of the device is unlikely.

Furthermore, BIOTRONIK is obligated to inform you that the regulatory agency can withdraw the frequency allocation and prohibit the radio service between the device and CardioMessenger. Since this service is currently established throughout Europe and North America, withdrawal of the frequency allocation is not expected in the foreseeable future.

The CardioMessenger, like the implanted device itself, has been evaluated by an independent testing authority for its compliance with statutory regulations. The CardioMessenger carries the following approval mark:

CE 0123

In addition, the CardioMessenger contains a radio modem that connects to the cellular network. BIOTRONIK uses the radio modem in accordance with the manufacturer's specifications and in compliance with the approval requirements.

The radio modem has been evaluated by an independent authority for its compliance with the statutory regulations. As an indication of this, it carries the following approval mark:

CE

Electromagnetic Compatibility

The CardioMessenger is protected from disturbances resulting from electromagnetic interference, electrostatic discharges, and other sources of interference – including interference induced by wiring. At the same time, interfering electromagnetic emissions from the CardioMessenger have been minimized. The CardioMessenger therefore meets the requirements of EN 60601-1-2 in every respect.

Other equipment, for example portable and mobile RF radiocommunications equipment, may also interfere with the CardioMessenger, even if this equipment complies with CISPR emission requirements. However, this possible electromagnetic interference does not affect the functionality of the implanted device.

Warranty

⚠ **WARNING**

The CardioMessenger and all original components by BIOTRONIK are not subject to warranty when modified, used other than intended, stored improperly, or transported incorrectly.

- Do not modify the CardioMessenger and the power supply brick under any circumstances and only use the original packaging for shipment.

9 Appendix

Technical Data

General information on the CardioMessenger Smart and power supply bricks (configured as medical electrical system)

- Operating mode: continuous operation
- Longevity: 6 years
- IP 22
- Operating temperature: -5°C to +40°C
- Battery charging temperature: 0°C to +40°C
- Storage and transport temperature: -20°C to +60°C
- Store in a dry place:

  Relative humidity 30% to 75% (non-condensing)
- Atmospheric pressure: from sea level to approx. 3000 m
- Information according to Section 33 of REACH, Regulation (EC) No. 1907/2006, see https://www.biotronik.com/material-compliance

CardioMessenger Smart

- Dimensions (L x W x H):
  approx. 130 x 65 x 17 mm
- Weight: approx. 127 g
- MICS frequencies: 402–405 MHz,
  FSK modulation
- MICS transmission power: 25 µW EIRP

CardioMessenger Smart 2G

- GSM frequencies: 850 MHz, 900 MHz,
  1800 MHz, 1900 MHz
- GSM transmission power:
  2 watts (850/900 MHz);
  1 watt (1800/1900 MHz)

CardioMessenger Smart 3G

- GSM frequencies: 850 MHz, 900 MHz,
  1800 MHz, 1900 MHz
- GSM transmission power:
  2 watts (850/900 MHz);
  1 watt (1800/1900 MHz)
- UMTS frequencies: WCDMA band 850 MHz,
  900 MHz, 1700 MHz, 1900 MHz, 2100 MHz
- UMTS transmission power: 0,25 W

CardioMessenger Smart 4G

- GSM frequencies: 850 MHz, 900 MHz, 1800 MHz, 1900 MHz
- GSM transmission power: 2 watts (850/900 MHz); 1 watt (1800/1900 MHz)
- LTE frequencies: 700 MHz, 800MHz, 850 MHz, 900 MHz, 1700, MHz, 1800 MHz, 1900 MHz, 2100 MHz
- LTE transmission power: 0,25 W

Power supply bricks

FRIWO FW7520/05

- Input voltage: 100–240 V AC at 50–60 Hz
- Output voltage: 5 V DC; 3 A
- Power cord type: micro USB-B

FRIWO FW8000/05

- Input voltage: 100–240 V AC at 50–60 Hz
- Output voltage: 5 V DC; 2 A
- Power cord type: micro USB-B

GlobTek GTM96180-1107-2.0

- Input voltage: 100–240 V AC at 50–60 Hz
- Output voltage: 5 V DC; 2.2 A
- Power cord type: micro USB-B

Battery (integrated)

- Type: lithium-ions

Symbols on the Device

The label icons on the CardioMessenger symbolize the following:

	Observe the technical manual (see Check the Package Contents [Page 87])
IP 22	Solid particle protection effective against fingers or similar objects > 12.5 mm Liquid ingress protection effective against dripping water when tilted at 15°
	Store in a dry place
	On and off key (standby)
	Port for micro USB connector

Legend for the Label

The label icons symbolize the following:

REF	BIOTRONIK order number
SN	Serial number
	Manufacturing date
	Follow the instructions for use!
	Storage temperature
	Air pressure limit
	Humidity limit
TP2	Compabiltiy with telemetry protocol version 2 of BIOTRONIK Home Monitoring
	Transceiver frequency

	This device contains material that requires special waste disposal according to the environmental protection guidelines. The European Directive 2012/19/EU on waste electrical and electronic equipment (WEEE 2) must be observed. Return devices that are no longer used to BIOTRONIK.
	CE mark
	Device
	Contents
	CardioMessenger Smart
	Power supply brick

Electromagnetic Emitted Interference

Electromagnetic Emitted Interference according to IEC 60601-1-2		
7.1	EN 55011 (CISPR 11) Conducted interference emissions	Group 1 Class B
	Radiated emission	
7.2.1	IEC 61000-3-2 Harmonic distortion (harmonic currents in the mains supply)	Not applicable See EN 61000-3-2 Section 7, power consumption < 75 W
7.2.2	IEC 61000-3-3 Voltage fluctuations and flicker in the mains supply	Not applicable See EN 61000-3-3 Section 6.1

Resistance to Electromagnetic Interference

Resistance to Electromagnetic Interference according to IEC 60601-1-2		
8.9	IEC 61000-4-2 Electrostatic discharge (ESD)	± (2, 4, 8) 15 kV air discharge
8.9/8.10	IEC 61000-4-3 Electromagnetic fields	10 V/m 80 MHz – 2.7 GHz 80% AM 1 kHz Other measurements see Table 9 (IEC 60601-1-2 8.10)
8.9	IEC 61000-4-4 Transient conducted surge voltages (EFT, bursts)	± 2 kV/100 KHz repetition frequency
8.9	IEC 61000-4-5 Surge voltage waves on supply lines	± 0.5 kV ± 1 kV ± 2 kV

Resistance to Electromagnetic Interference according to IEC 60601-1-2		
8.9	IEC 61000-4-6 Conducted radiofrequency interference	3 V/0.15 MHz – 80 MHz 6 V in ISM bands between 0.15 MHz and 80 MHz (according to Table 5) For modulation, see column 2, 80% AM 1 KHz
8.9	IEC 61000-4-8 AC frequency magnetic fields	30 A/m 50/60 Hz
8.9	IEC 61000-4-11 Voltage fluctuations and interruptions in supply voltage	100 to 240 V 50/60 Hz